LITHIUMVALLEY

*The actual product may slightly differ from certain promotional videos or images; please refer to the actual product as the standard. Unless otherwise specified, all data on this page is derived from our laboratory testing and may vary due to environmental factors.
*Specifications are subject to change without prior notice.

A1-20260417

LITHIUMVALLEY



W3-5D



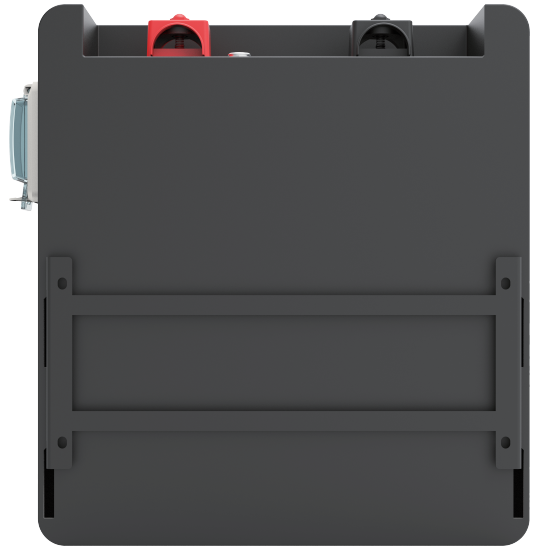

W3-5D Operation Manual

CONTENTS

1 Technical Data		1
2 Product Overview		3
2.1	Brief Introduction	3
2.2	Interface Introduction	4
2.2.1	Switch ON/OFF	4
2.2.2	CAN / RS485 Port	5
2.2.3	CONSOLE	5
2.2.4	Display Definition	6
3 Installation Guide		7
3.1	Checking Before Installation	7
3.1.1	Checking Outer Packing Materials	7
3.1.2	Checking Deliverables	7
3.2	Tools	9
3.3	Installation requirements	9
3.3.1	Installation environment requirements	9
3.3.2	Installation carrier requirements	9
3.4	Installation Instructions	10
3.4.1	Dimensions	10
3.4.2	Installation Procedure	11
4 Maintenance		17
4.1	Recharge Requirements During Normal Storage	17
4.2	Recharge Requirements When Over Discharged	17

01

TECHNICAL DATA

NOTE

Operating current derating according to cell voltage and battery temperature.



Performance	
Nominal Voltage	25.6 Vdc
Nominal Capacity	100Ah
Battery Energy	2560Wh
Charge Voltage	28.8 Vdc
Discharge Voltage	22.4 Vdc
Nominal Charge / Discharge Current	50A
Nominal Charge / Discharge Power	1280W
Max Charge / Discharge Current	100A
Max Charge / Discharge Power	2560W
Short Circuit Current	200A/3mS
Communication	
Display	SOC status indicator, LED indicator
Communication	RS232、RS485、CAN
General Specification	
Dimension(W×D×H mm)	413X376X145mm
Weight (Kg)	26.68KG
Installation	Floor stand or Wall mounted
Charging Temperature Range	0℃ ~ 55℃
Discharge Temperature Range	-20℃ ~ 60℃
Operating /Storage / humidity	≤95%RH
Max Operating Altitude	≤2000m
IP Rating	IP20
Cell Technology	$LiFePO_4$, Lithium Iron Phosphate
Scalability	Max 20 batteries in parallel
Standard Compliance	
Certification	

1. Test conditions: 100% depth of discharge (DoD), 0.2C rate charge & discharge at 25℃.
2. Charge/discharge derating occurs when the operating temperature from -10℃ to 5℃.& 45℃ to 55℃.
3. Condition apply. Refer to W3-5D Warranty Letter.

02

PRODUCT OVERVIEW

2.1 Brief Introduction

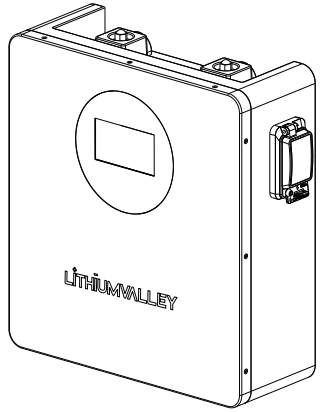

PRODUCT OVERVIEW

W3-5D is a lithium battery with an operating voltage range between 22.4~28.8V. It is designed for residential energy storage applications and works together with a 48v battery hybrid inverter. **W3-5D is not suitable for supporting life-sustaining medical devices.**

W3-5D has built-in BMS (Battery Management System), which can manage and monitor cells information including voltage, current and temperature.
Besides that, BMS can balance cells charging to extend cycle life. BMS has protection functions including over-discharge, over-charge, over-current and high/low temperature; the system can automatically manage charge state, discharge state and balance state.

Multiple W3-5D can be connected in parallel to expand capacity and power, 20 W3-5D can be connected in parallel at most.

2.2 Interface Introduction

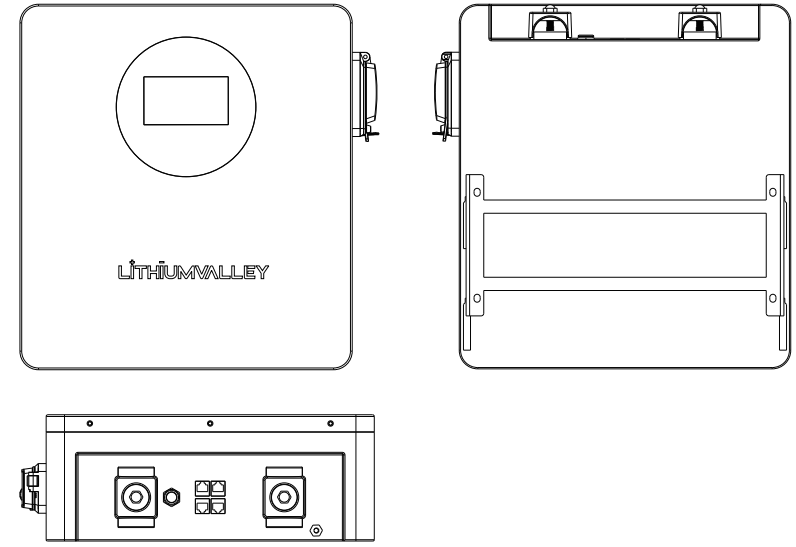

2.2.1 Switch ON/OFF

1. Switch ON

Turn on a single W3-5D, turn on the air switch, then press the circular weak current switch (more than 3 seconds) on / off button, the LED light and the battery works normally.

For multiple W3-5D in parallel, switch ON circular weak current switch on all batteries, long press (more than 3 seconds) ON/OFF button of MASTER battery, LED will light. battery system will automatically encode and assign ID to each slave battery, then battery system will operate normally.

2. Switch OFF

Press the Circular weak current switch of the master pack for more than 3 seconds and then release the button. When all slave pack are closed, the master pack will be closed (sleep mode). For a single W3-5D, turn off the Circular weak current switch. For multiple W3-5D in parallel, turn off the Circular weak current switch on the main battery first. Then turn off the Circular weak current switch on all subordinate batteries

2.2.2 CAN / RS485 Port

CAN / RS485 Communication Terminal (RJ45 port), connect to inverter, follow CAN / RS485 protocol.

PIN	Definition
Pin 1、Pin 8	RS485-B (to PCS, reserved)
Pin 2、Pin 7	RS485-A (to PCS, reserved)
Pin 3	NC
Pin 4	CANH (to PCS)
Pin 5	CANL (to PCS)
Pin 6	GND

2.2.3 CONSOLE

RS232 Communication Terminal (RJ45 port) follow RS232 protocol, for manufacturer or professional engineer to debug or service.

PIN	Definition
Pin 1、Pin 8	GND
Pin 2、Pin 7	RS232_TX
Pin 3、Pin 6	RS232_RX
Pin 4、Pin 5	NC

2.2.4 Display Definition

BMS color screen operation instructions

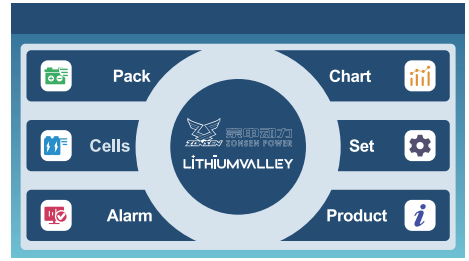

Pack: The main interface for displaying battery information, where users can view the remaining SOC, voltage, current, and charging and discharging status of the battery;

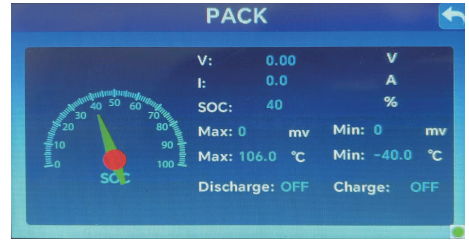

Cells: Battery cell information display interface, viewing the voltage value of a single battery cell;

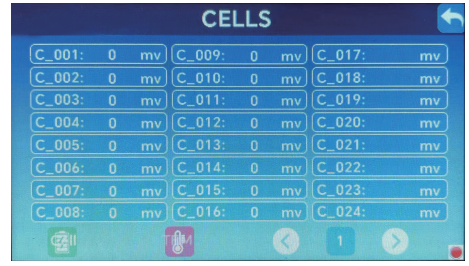

Alarm: Battery alarm query interface, which can view the current alarm and fault status;
Chart: Battery data curve statistics interface, where you can view schematic diagrams of voltage, current, and capacity curves;
Product: Battery version query interface, where you can view the current program version of the battery;

03

INSTALLATION GUIDE

Installation flow chart

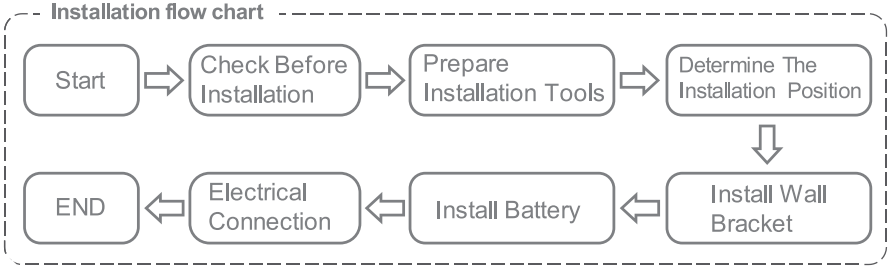

3.1 Checking Before Installation

3.1.1 Checking Outer Packing Materials

Packing materials and components may be damaged during transportation. Therefore, check the outer packing materials before installing the battery. Checking the surface of packing materials for damage, such as holes and cracks. If any damage is found, do not unpack the battery and contact the dealer as soon as possible. You are advised to remove the packing materials within 24 hours before installing the battery.

3.1.2 Checking Deliverables

After unpacking the battery, check whether deliverables are intact and complete. If any damage is found or any component is missed, contact the dealer.

The below table shows the components and mechanical parts that should be delivered.

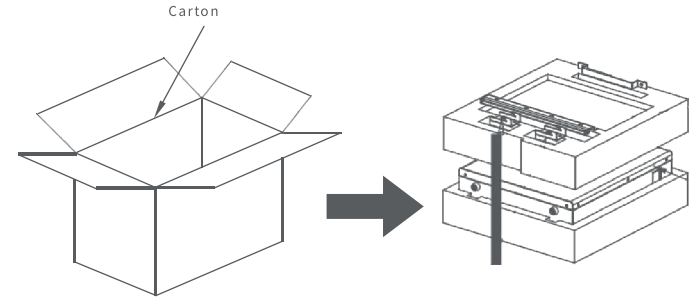

No.	Pictures of accessories	Quantit	Uses
1		1	Battery box
2		1	Wall mounting bracket
3		4	Lock Wall Pendant
4		1	yellow-green two-color grounding cable
5		1	Power line
6		1	Power line

No.	Pictures of accessories	Quantit	Uses
7		4	RJ45 Crystal head
8		2	Communication network cable
9		2	Desiccant
10		1	User manual
11		1	Outgoing Inspection Report

3.2 Tools

Tools			
Installation	Knife	Measuring tape	Socket wrench（10/16mm）
	Rubber mallet	Cross Screwdriver	Hammer drill（10mm）
Protection	ESD gloves	Safety goggles	Anti-dust respirator
	Safety shoes		

3.3 Installation requirements

3.3.1 Installation environment requirements

- Install the battery in the indoor environment.
- Place battery in secure location away from children and animals.
- Do not place the battery near any heat sources and avoid sparks.
- Do not expose the battery to moisture or liquids.
- Do not expose the battery to direct sunlight.
- Short-term suitable for Marine environment.

3.3.2 Installation carrier requirements

- Only mount battery on fire resistant building. Do not install batteries on flammable buildings.
- Battery is quite heavy, make sure the wall/ground can meet the load bearing requirements.

3.4 Installation Instructions

3.4.1 Dimensions

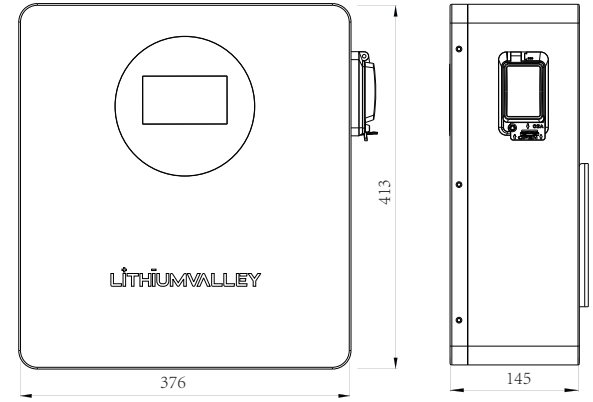

Minimum mounting distance between battery pack and equipment:

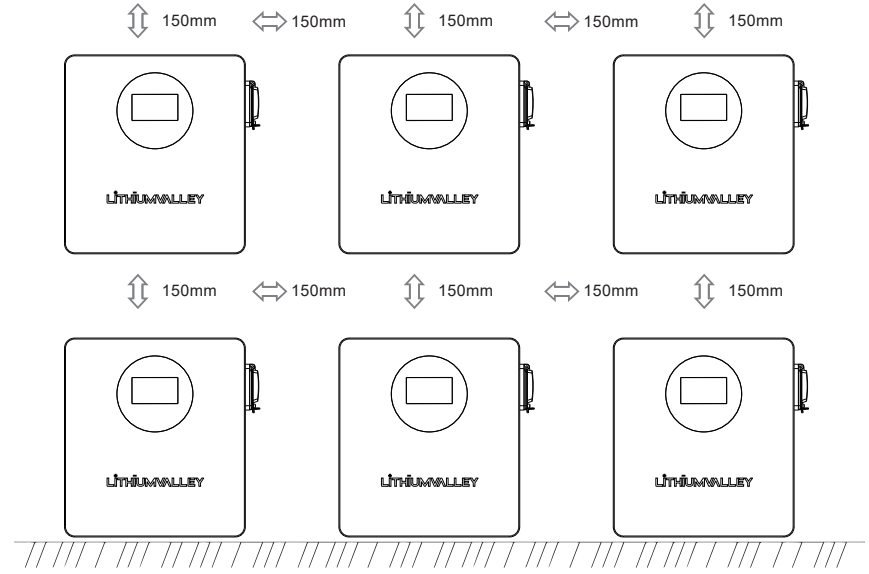

3.4.2 Installation Procedure

STEP 1

Drill the hole with an 10mm drill bit as follows and fix the wall bracket to the wall.

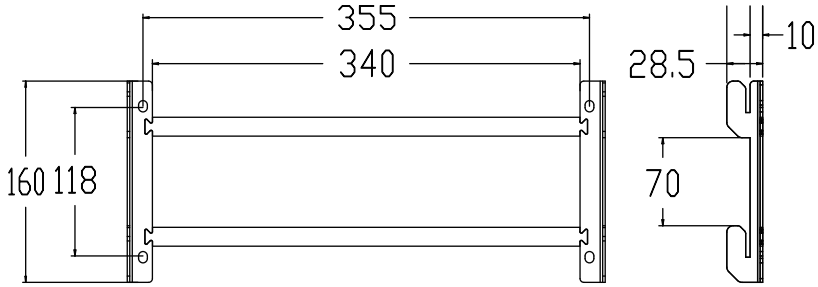

STEP 2

Install the hanging bracket.

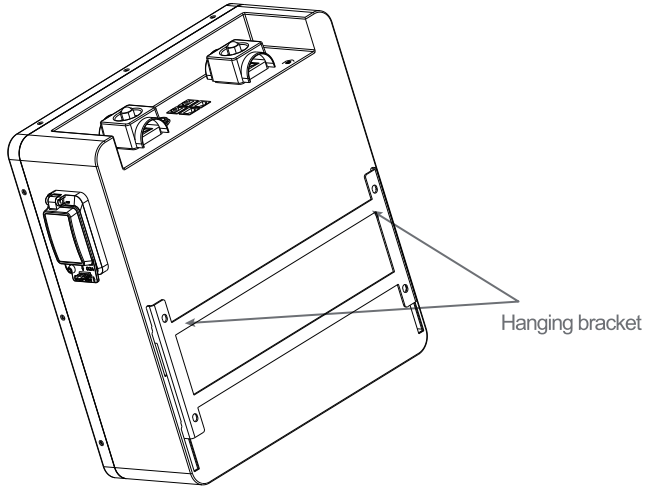

STEP 3

Hang W3-5D on the wall bracket and tighten it.

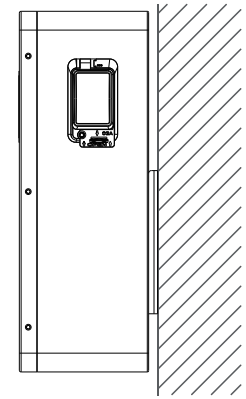

STEP 4

Connect to ground.

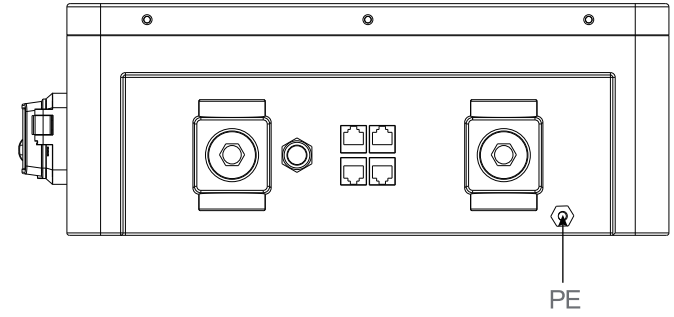

STEP 5

Connect power cable

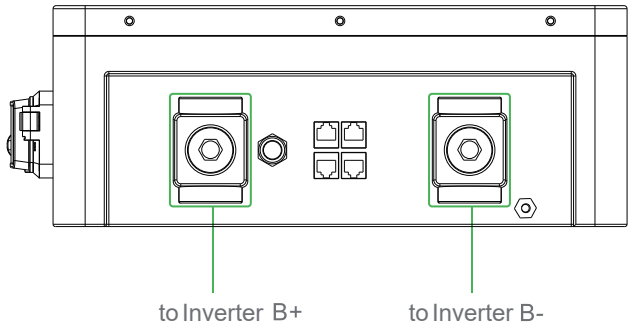

STEP 6

Connect communication cable.

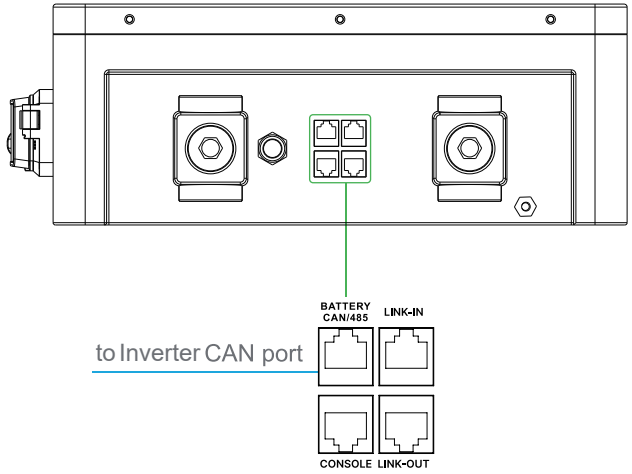

STEP 7

1. Load power exceeding 5kW requires at least 2 units Parallel operation.
2. The maximum number of Number of parallel machines is 20. The power of the inverter selected for the battery module must be less than the maximum output power of the battery module.

Parallel operation	Load power	Connection mode
1units	Below 2.5kW	7.1
2-5units	Below 2.5kW	7.2
2-20units	Over 2.5kW	7.3

⚠ Danger	Ensure power cables are installed with the correct polarity. A dangerous situation may arise if the polarities are reversed.
⚠ Danger	Do not create a short circuit between the positive and negative terminals of the battery. Ensure the polarity is correct during installation.
⚠ Warning	Incorrect communication cable connection will cause the battery system to operate in unexpected ways which may lead to system failure.

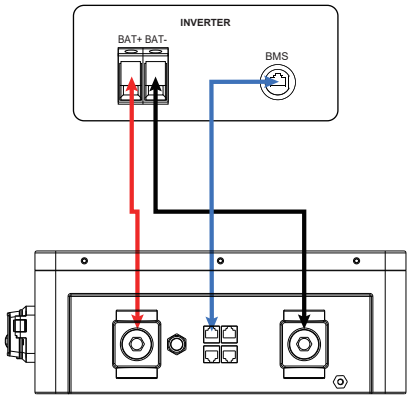

Cable connection in all the following views

- Lithium battery positive power cable
- Lithium battery negative power cable
- Lithium battery communication cable

7.1 ⚠ Warning

Wiring method of 1 units module with power below 2.5kW

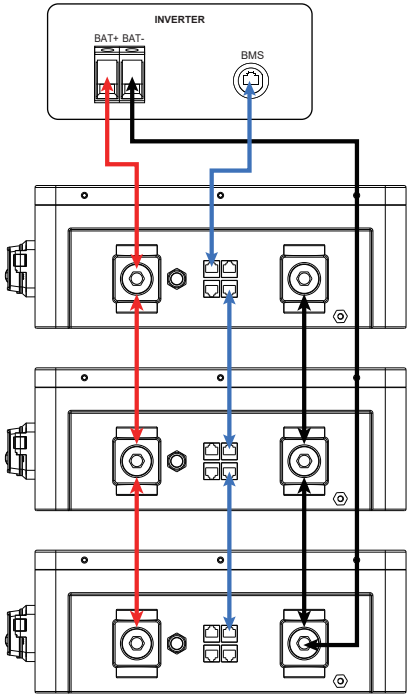

7.2 ⚠ Warning

For 2 units -5 units is-layer module with power below 2.5kW.
(The number of units in the middle of the diagram is omitted, the length of the two positive and negative poles connecting lines must be the same.)

7.3 ⚠ Warning

When using an inverter of 10kW or above, the positive and negative ports of each battery must be connected to the combiner cabinet in the wiring method shown in the figure below.
For 2 units -20 units is Over 2.5kW.
(The number of units in the middle of the diagram is omitted.In order to ensure equal current flow, the length of the positive and negative poles connecting lines must be the same.)

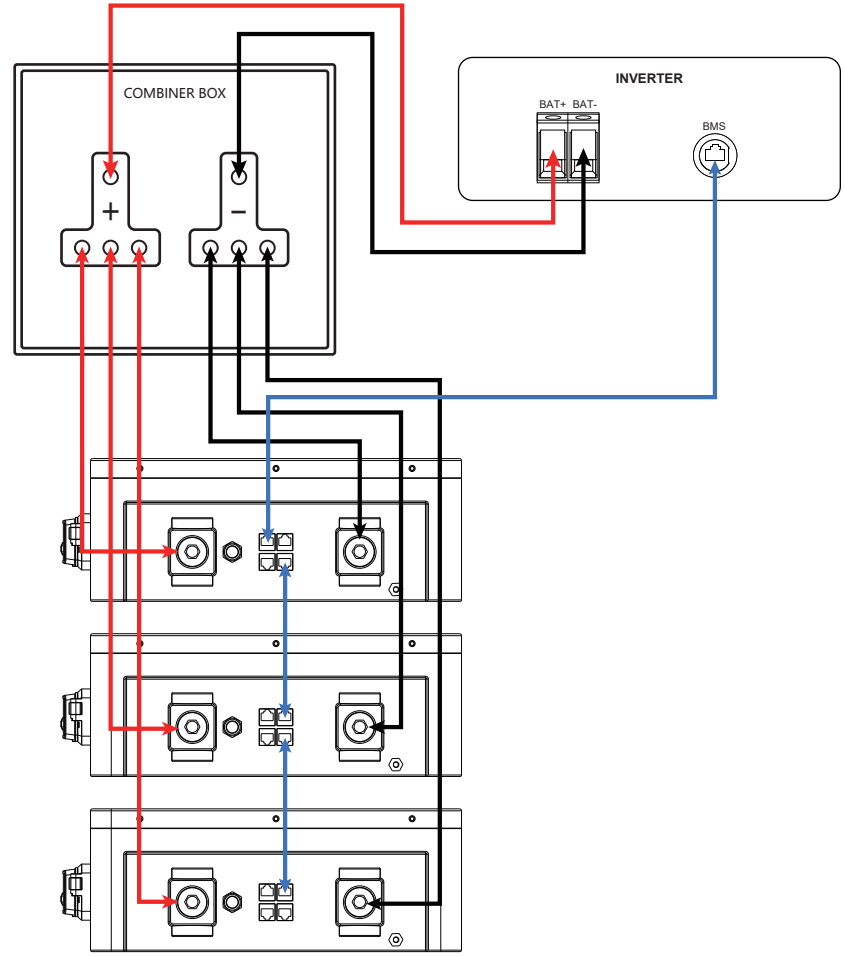

04

MAINTENANCE

4.1 Recharge Requirements During Normal Storage

Battery should be stored in an environment with temperature range between -10°C ~+45°C, and maintained regularly according to following table with 0.5C current till 40% SOC after long storage time.

Recharge Conditions When In Storage

Storage Environment Temperature	Relative Humidity of Storage Environment	Storage Time	SOC
Below -10℃	/	prohibit	/
-10~25℃	5%~70%	≤12 months	30%≤SOC≤60%
25~35℃	5%~70%	≤6 months	30%≤SOC≤60%
35~45℃	5%~70%	≤3 months	30%≤SOC≤60%
Above 45℃	/	prohibit	/

4.2 Recharge Requirements When Over Discharged

Over discharged (90% DOD) battery should be recharged according to following table, otherwise over discharged battery will be damaged.

Recharge conditions when battery is over discharged

Storage Environment Temperature	Storage Time	Note
-10~25℃	≤15 days	Battery Pack disconnected from to Inverter
25~35℃	≤7 days	
35~45℃	<12 hours	Battery Pack connected to Inverter