RAY VM IV

Hybrid On & Off Grid Energy Storage Inverter

Series: 4.2/6.2kW



Touchable button with large 4.3" colored LCD and RGB lights

Built-in WIFI and anti-dust kit

Dual output for smart load management

Reserved communication port for BMS, built-in BMS

Lithium Battery Supported

MPPT
Built-in MPPT(4.2KW - 6.2KW),with wide PV input range:60~450VDC

Easy to use
Configurable AC/PV output usage time and prioritization

On & Off-Grid
RAY VM IV series is suitable for on & off-grid applications

Battery
Battery equalization function extend life cycle
Reserved communication port(RS485,CAN)for BMS

Parallel function
Parallel operation up to 6 units

Easy access
Communication WiFi or bluetooth
Touchable button with large 4.3" colorful LCD

With battery connected

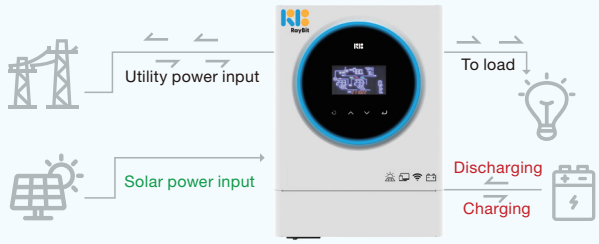

Without battery connected



Schematic diagram

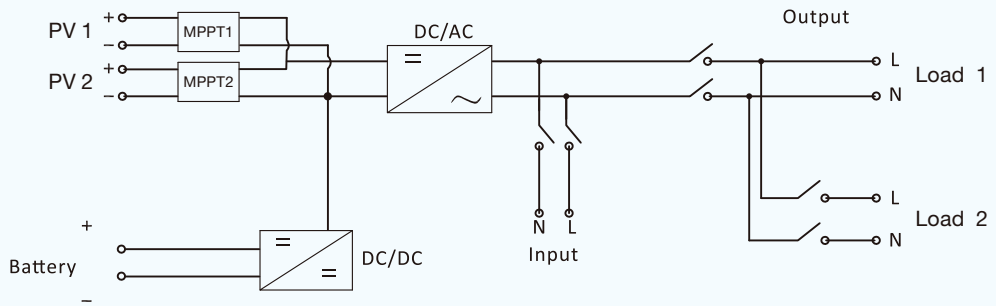

Info@raybit.pk

www.raybit.pk

Technical Specification	RAY VM IV series	
Rated Power(W)	4200VA/4200W	6200VA/6200W
AC INPUT		
Nominal Voltage(VAC)	230VAC	
Voltage range(VAC)	170~280VAC / 90~280VAC	
Frequency range(Hz)	50/60Hz	
AC OUTPUT		
Surge power	8000	12000
Output voltage(VAC)	220/230/240	
Output wave form	Pure sine wave	
Rated Frequency(Hz)	50/60	
Efficiency	93% max	
Transfer time	10ms typical(narrow range);20ms typical (wide range)	
BATTERY		
Nominal DC voltage(VDC)	24	48
Floating charge voltage(VDC)	27	54
Overcharge protection(VDC)	31	63
Overcharge protection(VDC)	Lithium & Lead-acid	
SOLAR CHARGER & AC CHARGER		
Max.PV array open circuit voltage(VDC)	500	
Max.PV array power(W)	5000W	7000W
MPPT input voltage range@operating(VDC)	60-450	
Max.input current(A)	27	
Max.solar charging current(A)	120	150
Max.AC charging current(A)	100	120
Max.charging current(A)	120	150
DISPLAY INTERFACE		
Parallel function	up to 6 units	
Communication	Standard:RS232,CAN&RS485;Optional:WiFi,Bluetooth	
Display	5”colorful LCD	
ENVIRONMENT		
Humidity	5~90%RH (No Condensing)	
Operating Temperature	-10°C to 50°C	
Net Weight(KG)	9	10
Dimensions D x W x H(mm)	434*311*126.5	500*440*136