LITHIUMVALLEY

*The actual product may slightly differ from certain promotional videos or images; please refer to the actual product as the standard. Unless otherwise specified, all data on this page is derived from our laboratory testing and may vary due to environmental factors.
*Specifications are subject to change without prior notice.

A3-20260604

LITHIUMVALLEY



W15-5A

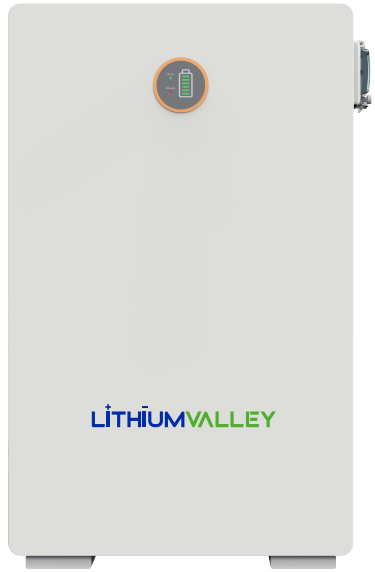

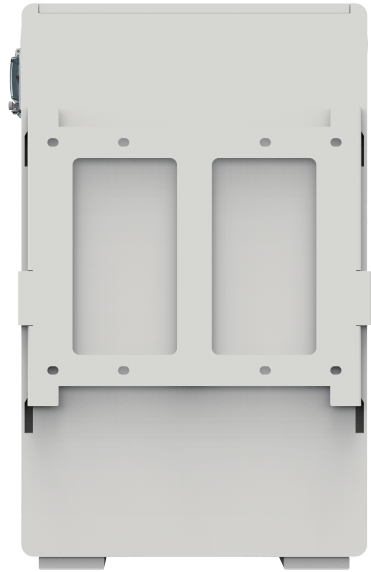

W15-5A Operation Manual

CONTENTS

1 Technical Data		1
2 Product Overview		3
2.1	Brief Introduction	3
2.2	Interface Introduction	4
2.2.1	Switch ON/OFF	4
2.2.2	LED Indicator Definition	5
2.2.3	CAN / RS485 Port	5
2.2.4	CONSOLE	6
3 Installation Guide		7
3.1	Checking Before Installation	7
3.1.1	Checking Outer Packing Materials	7
3.1.2	Checking Deliverables	7
3.2	Tools	9
3.3	Installation requirements	9
3.3.1	Installation environment requirements	9
3.3.2	Installation carrier requirements	9
3.4	Installation Instructions	10
3.4.1	Installation	10
3.4.2	Installation Procedure	11
3.4.3	Electrical connection steps	12
4 BMS Maintena		16
4.1	Trouble Shooting	16
4.2	BMS Protection	16
4.3	Routine maintenance	17
5 Maintenance		18
5.1	Recharge Requirements During Normal Storage	18
5.2	Recharge Requirements When Over Discharged	18

01

TECHNICAL DATA

NOTE

Operating current derating according to cell voltage and battery temperature.



Performance	
Nominal Voltage	51.2Vdc
Nominal Capacity	280Ah
Battery Energy	14336Wh
Charge Voltage	57.6Vdc
Discharge Voltage	44.8Vdc
Nominal Charge/Discharge Current	140A
Nominal Charge/Discharge Power	7168W
Max Charge / Discharge Current	200A
Max Charge / Discharge Power	10240W
Communication	
Display	SOC status indicator, LED indicator
Communication	RS232、RS485、CAN
General Specification	
Dimension(W×D×H mm)	800x500x227mm
Weight (Kg)	128kg
Installation	Floor stand or Wall mounted
Charging Temperature Range	0℃ ~ 55℃
Discharge Temperature Range	-20℃ ~ 55℃
Operating / Storage / humidity	≤95%RH
Max Operating Altitude	≤3000m
IP Rating	IP65
Cell Technology	$LiFePO_4$, Lithium Iron Phosphate
Scalability	Max 20 batteries in parallel
Recommended usage environment	Indoor or outdoor under eaves(avoid direct sunlight).
Standard Compliance	
Certification	

1. Test conditions: 100% depth of discharge (DoD), 0.2C rate charge & discharge at 25℃.
2. Charge/discharge derating occurs when the operating temperature from -10℃ to 5 ℃.& 45 ℃ to 55 ℃.
3. Condition apply. Refer to W15-5A Warranty Letter.

02

PRODUCT OVERVIEW

2.1 Brief Introduction

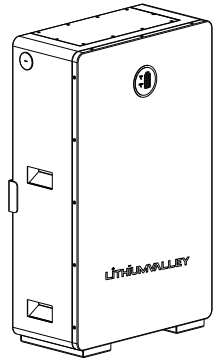

PRODUCT OVERVIEW

W15-5A is a lithium battery with an operating voltage range between 44.8~57.6V It is designed for residential energy storage applications and works together with a 48v battery hybrid inverter. **W15-5A is not suitable for supporting life-sustaining medical devices.**

W15-5A has built-in BMS (Battery Management System), which can manage and monitor cells information including voltage, current and temperature.
Besides that, BMS can balance cells charging to extend cycle life. BMS has protection functions including over-discharge, over-charge, over-current and high/low temperature; the system can automatically manage charge state, discharge state and balance state.

Multiple W15-5A can be connected in parallel to expand capacity and power,20 W15-5A can be connected in parallel at most.

2.2 Interface Introduction

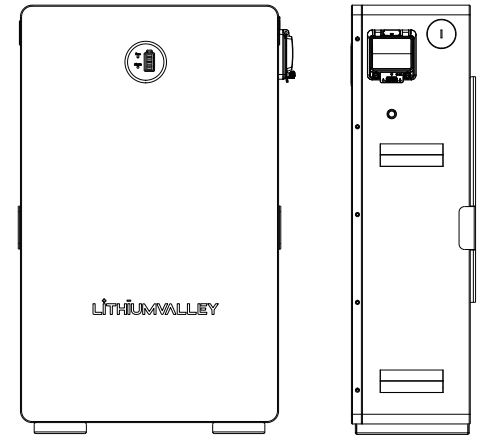

2.2.1 Switch ON/OFF

STARTUP PROCEDURE
1. Switch on the circuit breaker on the battery side.
2. Press and hold the battery's "POWER" button for 3 seconds, and confirm that the RUN indicator is flashing and the SOC indicator is lit normally.

Startup Status Display Instructions
1. Single Battery Pack Startup: Press and hold the "POWER" button for 3 seconds. The SOC, RUN, and ALM indicators will all light up and flash 3 times. After that, the SOC indicator will remain on, and the RUN indicator will flash, indicating that the startup is complete.
2. Parallel Battery Pack Startup: First, check if the communication connection cables are properly installed. Then, press and hold the "POWER" button on the master unit for 3 seconds. The SOC, RUN, and ALM indicators on both the master and slave units will all light up and flash 3 times. Afterward, the master unit's SOC indicator will remain on, and the RUN indicator will flash. The slave unit will only have the RUN indicator flashing, indicating that the master-slave battery pack startup is complete.

SHUTDOWN PROCEDURE

1. Turn off the circuit breaker on the battery side.
2. Press and hold the battery's "POWER" button for 3 seconds to shut down the battery, and ensure that the SOC, RUN, and ALM indicators are all turned off.

Shutdown Status Display Instructions

1. Single Battery Pack Shutdown: Press and hold the "POWER" button for 3 seconds. The SOC, RUN, and ALM indicators will light up one by one, then all will turn off, indicating that the shutdown is complete.
2. Parallel Battery Pack Shutdown: Press and hold the "POWER" button on the master unit for 3 seconds. The SOC, RUN, and ALM indicators on the master unit will light up one by one, then all will turn off. The RUN indicator on the slave unit will turn off, indicating that the master-slave battery pack shutdown is complete.

2.2.2 LED Indicator Definition

Note:

flash 1 - 0.25s light / 3.75s off

flash 2 - 0.5s light / 0.5s off

flash 3 - 0.5s light / 1.5s off

LED Indicators Instructions

		RUN	ALM	Battery Level Indicator						
Status		L8	L7	L6	L5	L4	L3	L2	L1	Descriptions
Shut down		OFF	OFF	OFF	OFF	OFF	OFF	OFF	OFF	All OFF
Standby		Flash 1	OFF	According to the battery level						Indicates Standby
Charging	Normal	Light	OFF	According to the battery level						The highest capacity indicator LED flashes(flash 2),others lighting
	Full Charged	Light	OFF	Light	Light	Light	Light	Light	Light	Turn to standby status when charger off
	Protection	OFF	Light	OFF	OFF	OFF	OFF	OFF	OFF	Stop charging
Discharg	Normal	Flash 3	OFF	According to the battery level						
	UVP	OFF	OFF	OFF	OFF	OFF	OFF	OFF	OFF	Stop charging
	Protection	OFF	Light	OFF	OFF	OFF	OFF	OFF	OFF	Stop discharging
Fault		OFF	Light	OFF	OFF	OFF	OFF	OFF	OFF	Stop charging and Discharging

Charging Battery Level Indicators Instructions

Status		Charging							
Battery Level Indicator		L8	L7	L6	L5	L4	L3	L2	L1
Battery Level (%)	0～17%	Light	OFF	OFF	OFF	OFF	OFF	OFF	Flash 2
	18～33%			OFF	OFF	OFF	OFF	Flash 2	Light
	34～50%			OFF	OFF	OFF	Flash 2	Light	Light
	51～66%			OFF	OFF	Flash 2	Light	Light	Light
	67～83%			OFF	Flash 2	Light	Light	Light	Light
	84～100%			Flash 2	Light	Light	Light	Light	Light
	Full Charged			Light	Light	Light	Light	Light	Light

Discharging Battery Level Indicators Instructions

Status		Discharge							
Battery Level Indicator		L8	L7	L6	L5	L4	L3	L2	L1
Battery Level (%)	0～17%	Flash 3	OFF	OFF	OFF	OFF	OFF	OFF	Light
	18～33%			OFF	OFF	OFF	OFF	Light	Light
	34～50%			OFF	OFF	OFF	Light	Light	Light
	51～66%			OFF	OFF	Light	Light	Light	Light
	67～83%			OFF	Light	Light	Light	Light	Light
	84～100%			Light	Light	Light	Light	Light	Light

2.2.3 CAN / RS485 Port

CAN / RS485 Communication Terminal (RJ45 port), connect to inverter, follow CAN / RS485 protocol.

PIN	Definition
Pin 1、Pin 8	RS485-B (to PCS, reserved)
Pin 2、Pin 7	RS485-A (to PCS, reserved)
Pin 3	NC
Pin 4	CANH (to PCS)
Pin 5	CANL (to PCS)
Pin 6	GND

2.2.4 CONSOLE

RS232 Communication Terminal (RJ45 port) follow RS232 protocol, for manufacturer or professional engineer to debug or service.

PIN	Definition
Pin 1、Pin 8	GND
Pin 2、Pin 7	RS232_TX
Pin 3、Pin 6	RS232_RX
Pin 4、Pin 5	NC

03

INSTALLATION GUIDE

Installation flow chart

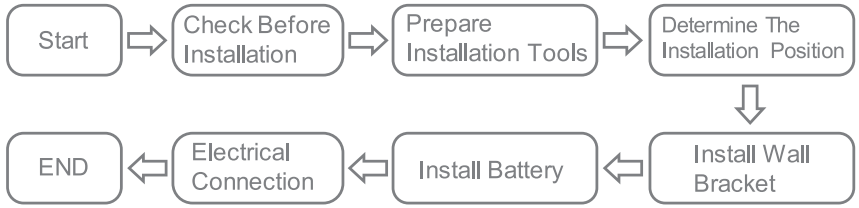

3.1 Checking Before Installation

3.1.1 Checking Outer Packing Materials

Packing materials and components may be damaged during transportation. Therefore, check the outer packing materials before installing the battery. Checking the surface of packing materials for damage, such as holes and cracks. If any damage is found, do not unpack the battery and contact the dealer as soon as possible. You are advised to remove the packing materials within 24 hours before installing the battery.

3.1.2 Checking Deliverables

After unpacking the battery, check whether deliverables are intact and complete. If any damage is found or any component is missed, contact the dealer.

The below table shows the components and mechanical parts that should be delivered.

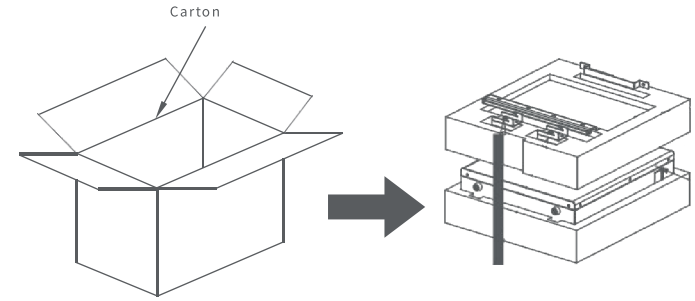

No.	Pictures of accessories	Quantit	Uses
1		1	Battery box
2		1	Wall mounting bracket
3		8	Lock Wall Pendant
4	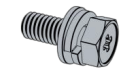	2	Crossed external hexagonal triple combination screws
5		1	Power line

No.	Pictures of accessories	Quantit	Uses
6		1	Power line
7		4	RJ45 Crystal head
8		2	Communication network cable
9		1	yellow-green two-color grounding cable
10		1	User manual

3.2 Tools

Tools			
Installation	Knife	Measuring tape	Socket wrench（10/16mm）
	Rubber mallet	Cross Screwdriver	Hammer drill (12mm)
Protection	ESD gloves	Safety goggles	Anti-dust respirator
	Safety shoes		

3.3 Installation requirements

3.3.1 Installation environment requirements

- Install the battery in the indoor environment.
- Place battery in secure location away from children and animals.
- Do not place the battery near any heat sources and avoid sparks.
- Do not expose the battery to moisture or liquids.
- Do not expose the battery to direct sunlight.
- Short-term suitable for Marine environment.

3.3.2 Installation carrier requirements

- Only mount battery on fire resistant building. Do not install batteries on flammable buildings.
- Battery is quite heavy, make sure the wall/ground can meet the load bearing requirements.

3.4 Installation Instructions

3.4.1 Installation

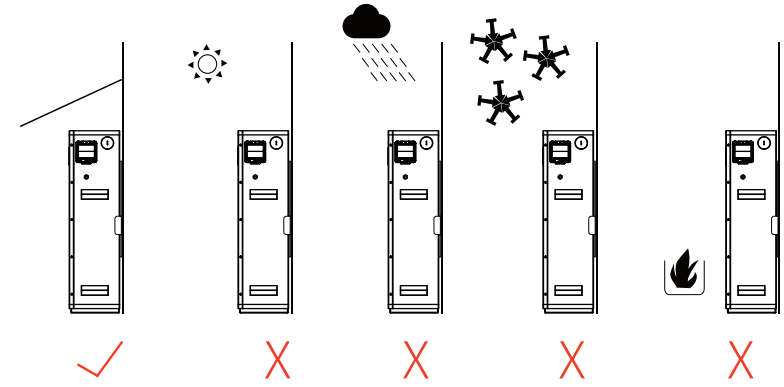

Minimum mounting distance between battery pack and equipment:

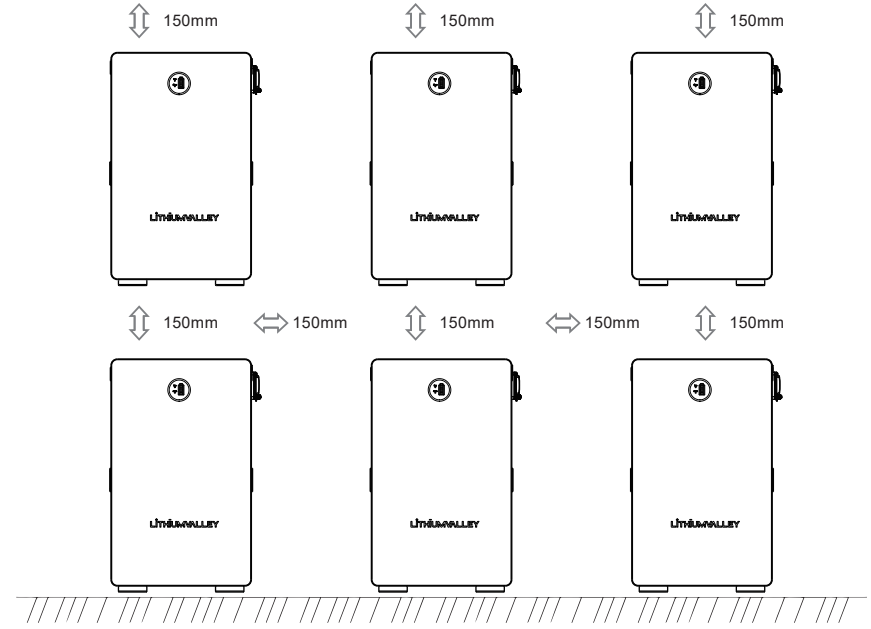

3.4.2 Installation Procedure

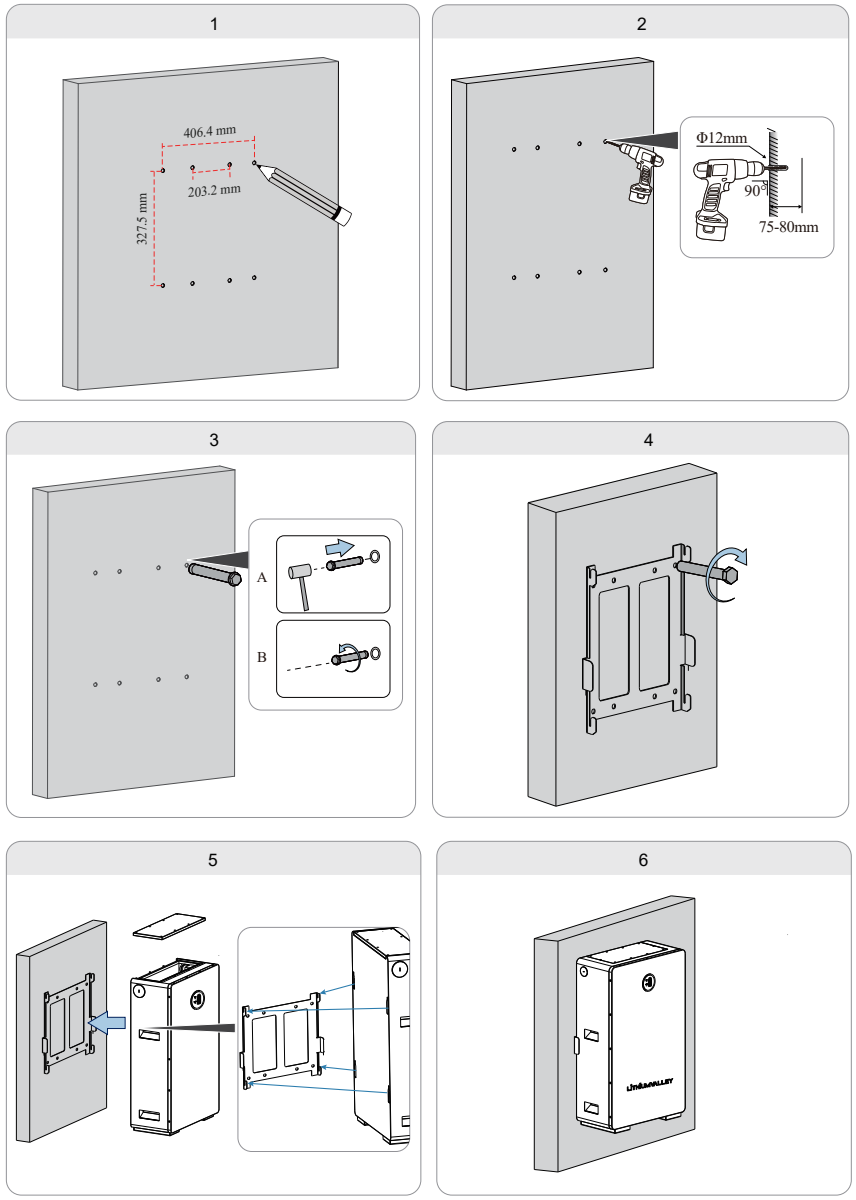

3.4.3 Electrical connection steps

Connect power cable and ground.

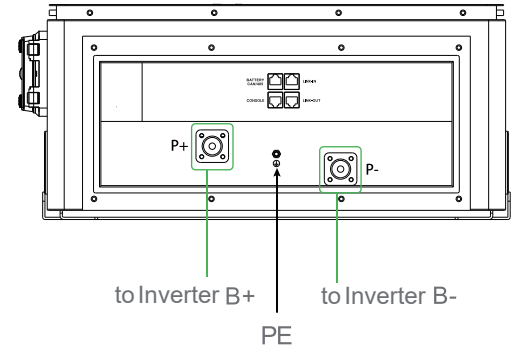

Connect communication cable.

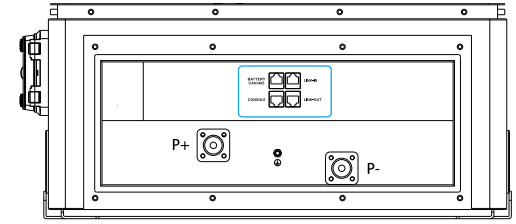

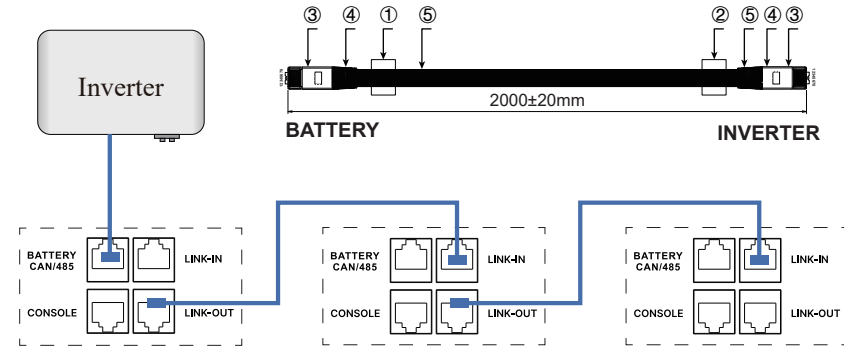

1. Load power exceeding 10kW requires at least 2 units Parallel operation.
2. The maximum number of Number of parallel machines is 20. The power of the inverter selected for the battery module must be less than the maximum output power of the battery module.

Parallel operation	Load power	Connection mode
1unit	Below 10kW	1
2-20units	Below 10kW	2
2-20units	Over 10kW	3

Danger	Ensure power cables are installed with the correct polarity. A dangerous situation may arise if the polarities are reversed.
Danger	Do not create a short circuit between the positive and negative terminals of the battery. Ensure the polarity is correct during installation.
Warning	Incorrect communication cable connection will cause the battery system to operate in unexpected ways which may lead to system failure.

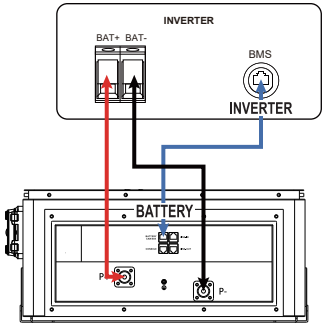

Cable connection in all the following views

- Lithium battery positive power cable
- Lithium battery negative power cable
- Lithium battery communication cable

1	**Warning** Wiring method of 1 unit module with power below 10kW

2	**Warning** For 2 units -20 units is-layer module with power below 10kW. (The number of units in the middle of the diagram is omitted, the length of the two positive and negative poles connecting lines must be the same.)

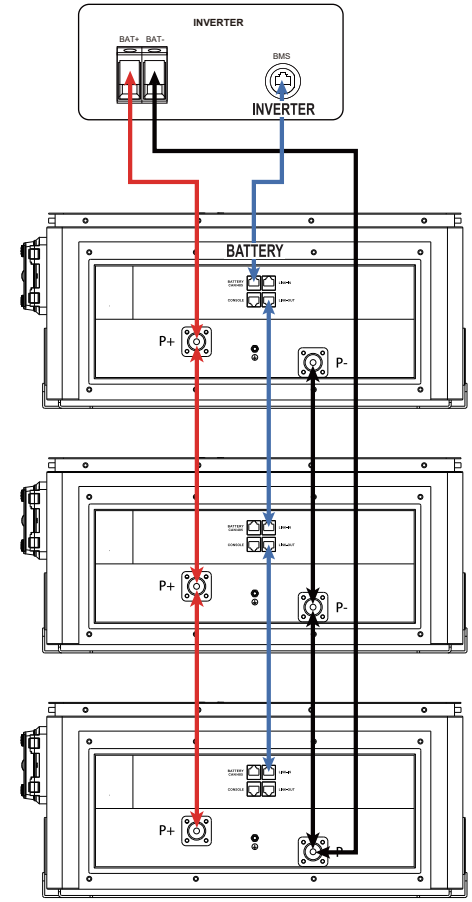

3	**⚠ Warning** When using an inverter of 10kW or above, the positive and negative ports of each battery must be connected to the combiner cabinet in the wiring method shown in the figure below. For 2 units -20 units is Over 10kW. (The number of units in the middle of the diagram is omitted.In order to ensure equal current flow, the length of the positive and negative poles connecting lines must be the same.)

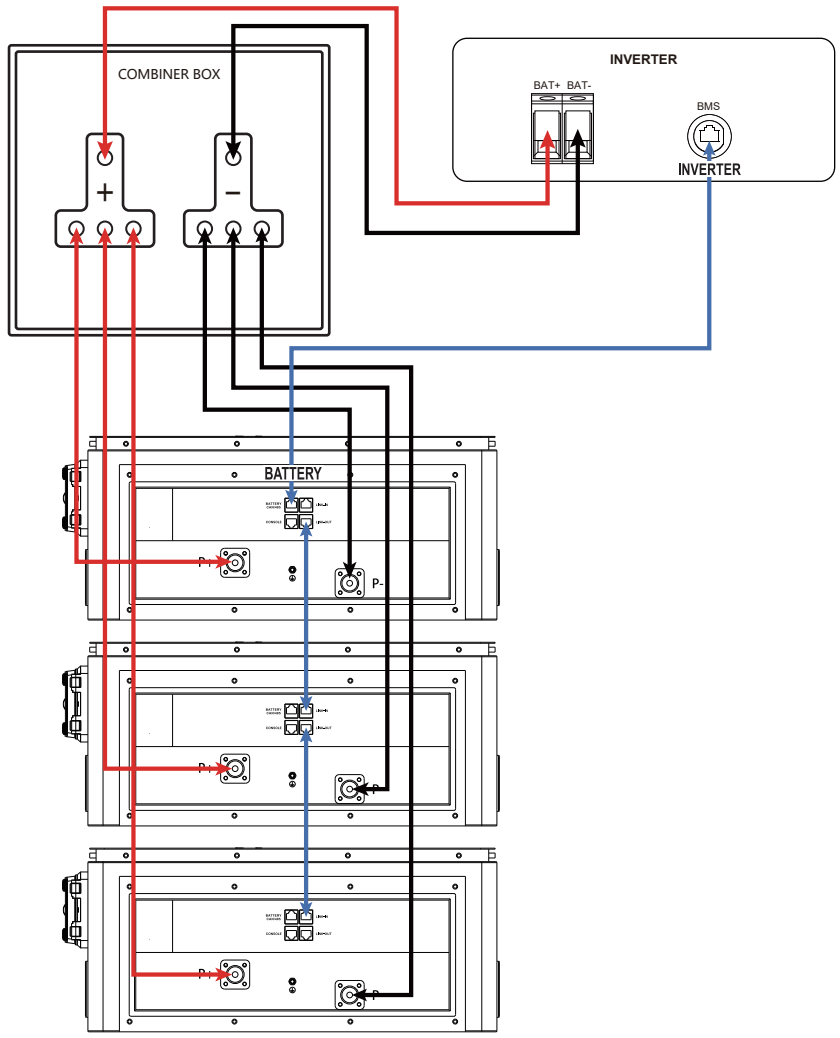

04

BMS Maintena

4.1 Trouble Shooting

The BMS (Battery Management System) is intended to safeguard the battery and battery cells against a variety of situations that could damage or destroy system components. This protection also aids in keeping the battery and battery cells operational for a greater number of life cycles. Each battery is specifically configured to ensure peak performance and operation with any inverter system.

4.2 BMS PROTECTION

1. PCB temperature protection

The BMS will ensure that the Printed Circuit Board (PCB) does not overheat. This is the component that houses most of the “brains” of the battery. This feature will turn off the battery if it begins to overheat.

2. Cell balance protection

Cell balance ensures that each cell is within a specific voltage range of each other. Cell balance is crucial for ensuring that the battery is operating properly for its lifespan. This is always done Automatically.

3. Environmental temperature protection

It may be dangerous to attempt using the battery in extreme heat or cold. Continued operation in these conditions may result in permanent damage to the battery module and its components. To prevent this, the BMS is designed to measure the temperature while charging/discharging and will shut down the battery to prevent damage.

4. Voltage protection

The BMS is designed to continuously monitor the voltage of each individual cell and ensure that they are not over/undercharged.

5. Current protection

The BMS is designed to constantly monitor the charge/discharge amperage and has built-in safeguards against exceeding specific parameters. These include built-in timers that shut off quickly in the event of short circuits, extremely high amperage and delayed shut down for amperage that is only slightly above the maximum capacity.

NOTE: If any fault from the table below persists, please contact the distributor or for additional troubleshooting.

FAULT	ANALYSIS
Overvoltage Protection	RUN light is constantly on.
Undervoltage Protection	5-minute delay before entering sleep mode.
Overtemperature Protection	ALM light is constantly on.
Low-Temperature Protection	ALM light is constantly on.
MOS Overtemperature Protection	ALM light is constantly on.
Ambient High Temperature	ALM light is constantly on.
Ambient Low Temperature	ALM light is constantly on.
Short Circuit Protection	ALM light is constantly on.
Charging	RUN light is constantly on, SOC light is flashing.
Discharging	RUN light is flashing, SOC light is constantly on.
Standby	RUN light is flashing, SOC light is constantly on.

4.3 Routine maintenance

To ensure the long-term running of the energy storage system, you are advised to maintain batteries regularly.

Check content	Inspection method	Maintenance cycle
System cleanliness	Check whether the appearance of the system is damaged or deformed.	Once every 6 to 12 months
System running state	1. Check that the battery does not generate abnormal sound when it is in operation. 2. Check that the battery parameters are correctly set when the battery is running.	Once every 6 months
Electrical connection	1. Check that cables are secured. 2. Check that cables are intact, and that in particular, the parts touching the metallic surface are not scratched.	Once every 6 months
Ground reliability	Check that ground cables are securely connected.	The first inspection is 6 months after the initial commissioning. From then on, the interval can be 6 to 12 months.

05

MAINTENANCE

5.1 Recharge Requirements During Normal Storage

Battery should be stored in an environment with temperature range between -10°C ~+45°C, and maintained regularly according to following table with 0.5C current till 40% SOC after long storage time.

Recharge Conditions When In Storage

Storage Environment Temperature	Relative Humidity of Storage Environment	Storage Time	SOC
Below -10℃	/	prohibit	/
-10~25℃	5%~70%	≤12 months	30%≤SOC≤60%
25~35℃	5%~70%	≤6 months	30%≤SOC≤60%
35~45℃	5%~70%	≤3 months	30%≤SOC≤60%
Above 45℃	/	prohibit	/

5.2 Recharge Requirements When Over Discharged

Over discharged (90% DOD) battery should be recharged according to following table, otherwise over discharged battery will be damaged.

Recharge conditions when battery is over discharged

Storage Environment Temperature	Storage Time	Note
-10~25℃	≤15 days	Battery Pack disconnected from to Inverter
25~35℃	≤7 days	
35~45℃	<12 hours	Battery Pack connected to Inverter